Virtual Lab Report

Course: Linear Integrated Circuits
Course Code: BEC405D

submitted by

YUKTHESHA L
4NI24EC179
4TH SEM, ECE,"C" SECTION

Course Instructor

Dr Remya Jayachandran

Assistant Professor

Dept. of Electronics and Communication Engineering

The National Institute of Engineering, Mysuru.

Department of Electronics and Communication Engineering

The National Institute of Engineering

(An Autonomous Institute under VTU, Belagavi

Recognised by AICTE, New Delhi, Grant-in-Aid by the Government of Karnataka, Accredited by NAAC, New Delhi) Mysuru – 570 008

Characteristics and Parameters of Op-Amp

Aim:

To study and measure the characteristics and parameters of an Op-amp (IC-741):

(a) Input bias current at inverting terminal

(b) Input bias current at non-inverting terminal

(c) Input offset current

(d) Input offset voltage

(e) Slew rate

1. Introduction

An operational amplifier (Op-Amp) is a high gain differential amplifier widely used in analog circuit design. It amplifies the difference between two input voltages while rejecting signals that are common to both inputs.

The IC-741 is one of the most commonly used general-purpose operational amplifiers. Although an ideal op-amp is assumed to have infinite gain, infinite input impedance, zero output impedance, and infinite bandwidth, practical op-amps exhibit several non-ideal characteristics.

Some of the important parameters that describe the performance of an op-amp include input bias current, input offset current, input offset voltage, and slew rate. These parameters affect the accuracy and response of analog circuits using operational amplifiers.

This experiment studies these characteristics using simulation circuits.

2. Theory

An operational amplifier is a direct coupled high gain amplifier usually consisting of one or more differential amplifiers and followed by a level translator and an output stage. The output stage is generally a push-pull or push-pull complementary-symmetry pair. An operational amplifier is available as a single integrated circuit package.

The operational amplifier is a versatile device that can be used to amplify dc as well as ac input signals and was originally designed for performing mathematical operations such as addition, subtraction, multiplication and integration. Thus, the word operational amplifier stems for its original use for these mathematical operations and is abbreviated to op-amp. With the addition of suitable external feedback components, the modern-day op-amp can be used for a variety of applications, such as ac and dc signal amplification, active filters, oscillators and others.

Since an op-amp is a multistage amplifier, it can be represented by a block diagram as shown in figure.

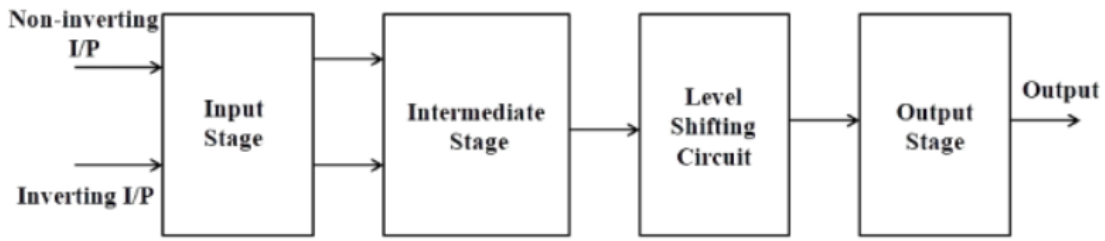

Fig-1: Block diagram of op-amp

The input stage is the dual input, balanced-output differential amplifier. This stage generally provides most of the voltage gain of an amplifier and also establishes the input resistance of the op-amp. The intermediate stage is usually another differential amplifier, which is driven by the output of the first stage. In most amplifiers the intermediate stage is the dual input, unbalanced (single-ended) output. Because direct coupling is used, the dc voltage at the output of the intermediate stage is well above ground potential. Therefore, generally, the level translator (shifting) circuit is used after the intermediate stage to shift the dc level at the output of the intermediate stage downward to zero volts with respect to ground. The final stage is usually a push-pull complementary amplifier output stage. The output stage increases the output voltage swing and raises the current supplying capability of the op-amp. A well-designed output stage also provides low output resistance.

Schematic symbol

Figure shows the schematic symbol of an op-amp

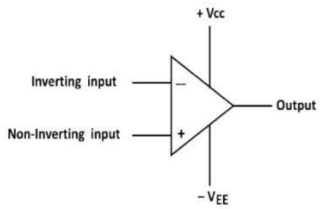

Fig-2: Schematic symbol of op-amp

The input differential amplifier stage of the op-amp is designed to be operated in the differential mode, the differential inputs are designated by the (+) and (-) notations. The (+) input is the non-inverting input. An ac signal (or dc voltage) applied to this input produces an in-phase (or

same polarity) signal at the output. On the other hand, the (-) input is the inverting input because an ac signal (or dc voltage) applied to this input produces a 180° out of phase (or opposite polarity) signal at the output.

Characteristics of an ideal op-amp

An ideal op-amp would exhibit the following electrical characteristics:

- Infinite voltage gain A.
- Infinite input resistance Ri, so that almost any signal source can drive it and there is no loading of the preceding stage.
- Zero output resistance Ro, so that the output can drive an infinite number of other devices.
- Zero output voltage when input voltage is zero.
- Infinite bandwidth, so that any frequency signal from 0 to ∞ Hz can be amplified without attenuation.
- Infinite common-mode rejection ratio (CMRR), so that the output common mode noise voltage is zero.
- Infinite slew rate, so that output voltage changes occur simultaneously with input voltage changes.

Parameters of an op-amp

a) Input offset voltage

Input offset voltage is the voltage that must be applied between the two input terminals of an op-amp to null the output as shown in Fig.3. In figure V_{dc1} and V_{dc2} are dc voltages and R_s represents the source resistance. We denote input offset voltage by V_{io}. This voltage V_{io} could be positive or negative. For a 741C, the maximum value of V_{io} is 6mV dc. The smaller the value of V_{io}, the better the input terminals are matched. For instance, the 741C precision op-amps has maximum V_{io}= 150µV.

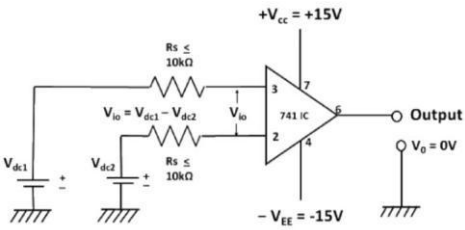

Fig-3: Input offset voltage V_{io}

b) Input offset current

The algebraic difference between the currents into the inverting and non-inverting terminals is known as input offset current I_{io}(Fig. 4). In the form of an equation,

$$I_{io} = |I_{B1} - I_{B2}|$$

where I_{B1} is the current into the non-inverting input and I_{B2} is the current into the inverting input. The input offset current for the 741C is maximum 200nA. As the matching between two input terminals is improved, the difference between $I_{B1}$and I_{B2} becomes smaller; i.e. the I_{io} value decreases further. For instance, the precision op-amp 741C has a maximum value of lio equal to 6nA, a dramatic improvement over older technology.

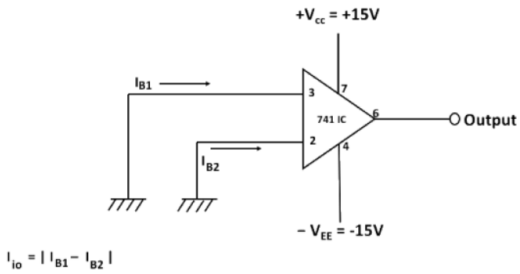

Fig-4: Input offset current I_{io}

c) Input bias current

Input bias current I_B, is the average of the currents that flow into the inverting and non-inverting input terminals of the op-amp. In the form of an equation,

$$I_B = (I_{B1} + I_{B2})/2$$

I_B = 500nA (maximum) for 741C, whereas for the precision 741C, it is ±7nA. The two input currents I_{B1} and I_{B2} are actually the base currents of the first differential amplifier stage

d) Common mode rejection ratio:

The common-mode rejection ratio (CMRR) is defined as the ratio of differential voltage gain A_d to the common mode voltage gain A_{cm} i.e,

$$CMRR = A_d / A_{cm}$$

The differential voltage gain A_d is same as the large-signal voltage gain A, however, the common-mode voltage gain can be determined from the circuit of Fig. 5 as

$$A_{cm} = V_{ocm} / V_{cm}$$

where -
V_{ocm} = output common mode voltage
V_{cm} = input common mode voltage
A_{cm} = common mode voltage gain

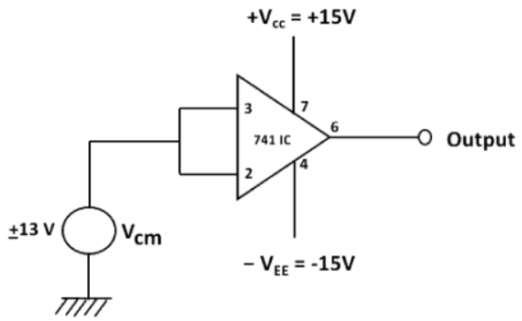

Fig-5: Common mode circuit

Generally, the A_{cm} is very small and Ad = A is very large; therefore, the CMRR is very large. Being a very large value, the CMRR is most often expressed in decibels(dB). For the 741C, CMRR is typically 90dB. This value of CMRR is determined under the test condition that the input source resistance R_s<10KΩ. In Fig.5 R_s is assumed to be zero because most of the practical voltage sources have negligible source resistances.

The higher the value of CMRR, the better is the matching between the two input terminals and the smaller is the output common mode voltage. For the 741C precision op-amp, CMRR =120dB. This means that the precision 741C has a better ability to reject common-mode voltages, such as electrical noise, than the 741C and is preferred in noise environments.

e) Slew rate

Slew Rate (SR) is defined as the maximum rate of change of output voltage and is expressed in volts per micro-seconds

$$SR= (dV_o /dt)_{max} \text{ V/µs},$$

Slew rate indicates how rapidly the output of an op-amp can change in response to changes in the input frequency. The slew rate changes with change in voltage gain and is normally specified at unity (+1) gain. The slew rate of an op-amp is fixed; therefore, if the slope requirements of the output signal are greater than the slew rate, distortion occurs. The slew rate is one of the important factors in selecting the op-amp for ac applications, particularly at relatively high frequencies.

One of the drawbacks of the 741C is its low slew rate (0.5V/µs), which limits its use in relatively high frequency applications, especially in oscillators, comparators and filters. The newer op-amps: LF351, µAF771 and MC 34001 which are direct replacements for 741, have

a slew rate of 13V/µs. In high-speed op-amps, especially, the slew rate is significantly improved. For instance, the LM318 has a slew rate of 70V/µs.

Op-amp IC-741 pin configuration

The pin configuration of IC-741 general purpose operational amplifier is shown in Fig. 6. The reference point of the chip is the notch at the top. The pins are numbered in a counter clockwise direction, starting at the notch.

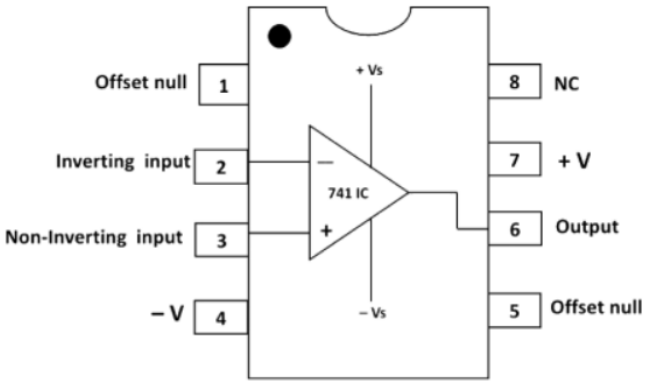

Fig-6: Pin diagram of op-amp IC-741

- **Pin 1** and **Pin 5** are offset null pins. Offset null is a calibration feature of the op-amp. The op-amp is so sensitive to the input voltage that at times, the output will generate a signal even when there is no intentional input. To avoid this condition for certain applications, offset null pins are provided. They are usually connected to a variable resistance such as a potentiometer. The potentiometer can be adjusted to produce a zero-output voltage from Pin 6.
- **Pin 2** and **Pin 3** are two input pins. Both inputs, pin 2 and pin 3, generate an output at Pin 6, but they generate opposite polarities. Pin 2 is the inverting input. Any signal applied to Pin 2 generates a signal of opposite polarity at the output. The non-inverting input, Pin 3, generates an output of the same polarity at Pin 6.
- Power to the op-amp is provided through **Pin 4** and **Pin 7**. Pin 4 is either connected to ground or a negative voltage value from 3 to 18 volts. Pin 7 is connected to the positive voltage of the power supply.
- The output of the amplifier is at **Pin 6**.
- **Pin 8** is not used. 'NC' stands for no connection.

3. Procedure

A. Measurement of Input Bias Current I_B

a) Measurement of inverting bias current I_{B1}

1. Click on the components button to place the component on the table.

2. Make connections as per the circuit diagram or connection table.

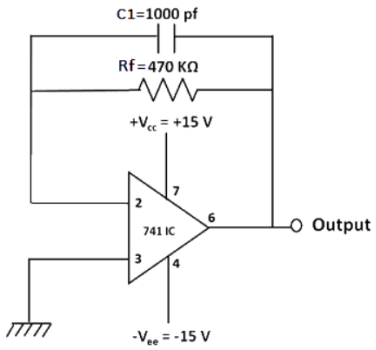

Fig 2: Circuit diagram to measure inverting bias current.

Table 1: Connection table to measure inverting bias current.

S. No.	Source	Target
1	IC741_ pin 07	Supply VCC
2	IC741_ pin 03	Supply GND
3	Multimeter _GND	Supply GND
4	IC741_ pin 04	Supply VEE
5	IC741 _ pin 02	Resistance (R_f) _ terminal C1
6	IC741_ pin 06	Resistance (R_f) _ terminal A1
7	IC741_ pin 02	Capacitance (C_1) _ terminal C1
8	IC741_ pin 06	Capacitance (C_1) _ terminal A1
9	Multimeter_VCC	IC741_ pin 06

3. Click on **'Check Connection'** button to check connections. If correct, click on **'Show output voltage'** button to view output on DMM.

4. Calculate the inverting bias current using the formula:

$$I_{B1} = V_o/R_f$$

5. Click on **'Result'** button and enter the calculated value.

6. Click on **'Reset'** button and proceed in the same way to calculate the input bias current at non-inverting terminal.

b) Measurement of non-inverting bias current I_{B2}

1. Click on the components button to place the component on the table.

2. Make connections as per the circuit diagram or connection table.

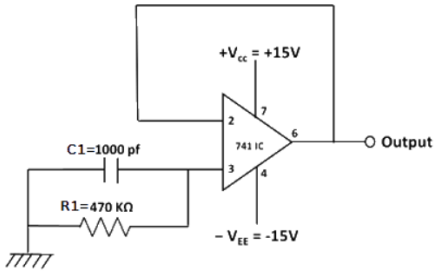

Fig 3: Circuit diagram to measure non-inverting bias current.

Table 2: Connection table to measure non-inverting bias current.

S. No.	Source	Target
1	IC741_ pin 07	Supply VCC
2	Multimeter_GND	Supply GND
3	IC741_ pin 06	IC741_ pin 02
4	IC741_ pin 04	Supply VEE
5	IC741_ pin 03	Resistance (R_1) _terminal C1
6	Supply GND	Resistance (R_1) _terminal A1
7	IC741_ pin 03	Capacitance (C_1) _terminal C1
8	Supply GND	Capacitance (C_1) _terminal A1
9	Multimeter_VCC	IC741_ pin 06

3. Click on **'Check Connection'** button to check connections. If correct, click on **'Show output voltage'** button to view output on DMM.

4. Calculate the non-inverting bias current using the formula:

$$I_{B2} = V_o/R_1$$

5. Click on **'Result'** button and enter the calculated value.

6. The input bias current I_B hence, can be calculated using the formula:

$$I_B = (I_{B1} + I_{B2})/2$$

where, I_{B1} has to be calculated from previous part.

B. Measurement of input offset current I_{io}

1. Click on the components button to place the component on the table.

2. Make connections as per the circuit diagram or connection table.

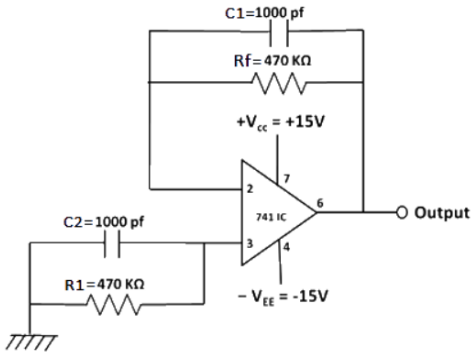

Fig 4: Circuit diagram to measure input offset current.

Table 3: Connection table to measure input offset current.

S. No.	Source	Target
1	IC741_ pin 07	Supply VCC
2	Multimeter_GND	Supply GND
3	IC741_ pin 04	Supply VEE
4	Resistance (R_f)_terminal A1	IC741_ pin 02
5	Resistance (R_f)_terminal C1	IC741_ pin 06
6	Capacitance (C_1) _terminal A1	IC741_ pin 02
7	Capacitance (C_1) _terminal C1	IC741_ pin 06
8	Resistance (R_1) _ terminal A1	IC741_ pin 03
9	Resistance (R_1) _ terminal C1	Supply GND
10	Capacitance (C_2) _terminal A1	IC741_ pin 03
11	Capacitance (C_2) _terminal C1	Supply GND
12	Multimeter_VCC	IC741_ pin 06

3. Click on **'Check Connection'** button to check connections. If correct, click on **'Show output voltage'** button to view output on DMM.

4. Calculate the input offset current using the formula:

$$I_{io} = V_o/R_f$$

5. Click on **'Result'** button and enter the calculated value.

C. Measurement of input offset voltage V_{io}

1. Click on the components button to place the component on the table.

2. Make connections as per the circuit diagram or connection table.

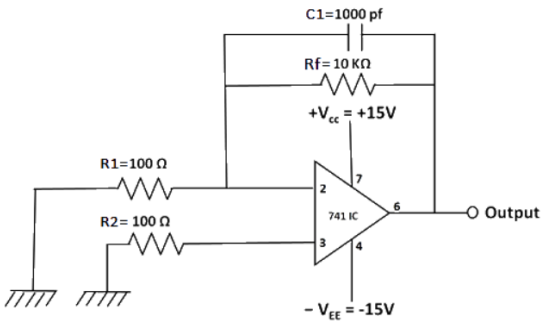

Fig 6: Circuit diagram to measure input offset voltage.

Table 4: Connection table to measure input offset voltage.

S. No.	Source	Target
1	IC741_ pin 07	Supply VCC
2	Multimeter_GND	Supply GND
3	IC741_ pin 04	Supply VEE
4	Resistance (R_f)_terminal A1	IC741_ pin 02
5	Resistance (R_f)_terminal C1	IC741_ pin 06
6	Capacitance (C_1) _terminal A1	IC741_ pin 02
7	Capacitance (C_1) _terminal C1	IC741_ pin 06
8	Resistance (R_2) _terminal A1	IC741_ pin 03
9	Resistance (R_2) _terminal C1	Supply GND
10	Resistance (R_1) _terminal A1	IC741_ pin 02
11	Resistance (R_1) _terminal C1	Supply GND
12	Multimeter_VCC	IC741_ pin 06

3. Click on **'Check Connection'** button to check connections. If correct, click on **'Show output voltage'** button to view output (**V_o**) on DMM.

4. Calculate the input offset voltage, **V_{io}** using the formula:

$$V_{io} = (V_o - I_{io}R_f)/(1+R_f/R_i)$$

5. Click on **'Result'** button and enter the calculated value.

D. Measurement of slew rate S.R.

1. Click on the components button to place the component on the table.

2. Make connections as per the circuit diagram or connection table.

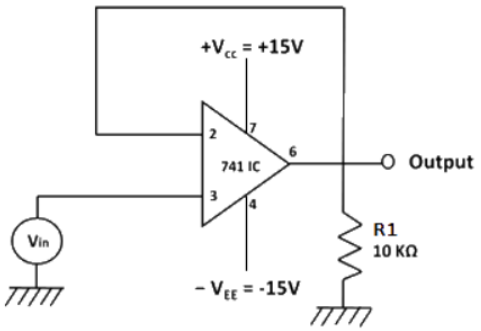

Fig 8: Circuit diagram to measure slew rate.

Table 5: Connection table to measure slew rate.

S. No	Source	Target
1	IC741_ pin 07	Supply VCC
2	IC741_ pin 04	Supply VEE
3	Generator_terminal C	Supply GND
4	Resistance (R_1) _terminal A1	IC741_ pin 06
5	Resistance (R_1) _terminal C1	Supply GND
6	IC741_ pin 06	IC741_ pin 02
7	Generator_ terminal A	IC741_ pin 03
8	CRO_ terminal C	IC741_ pin 06
9	Generator_terminal A	CRO_terminal A

3. The **input signal** has to be taken from the red terminal of A.F. Oscillator while the other terminal has to be grounded.

4. Also, feed the input signal to channel CH1 of the C.R.O and the output from Op-Amp IC must be fed to the channel CH2.

5. Click on **'Check Connection'** button to check connections. If correct, click on **'Show output voltage'** button to view output.

6. Increase the frequency of input signal using the dial** on A.F. Oscillator until output wave becomes triangular. This is the required frequency $\mathbf{f_{max}}$ in KHz.

7. Calculate the slew rate using the formula:

$$\mathbf{S.R. = 2\pi f_{max} V_m / 10^6 \quad V/\mu s}$$

8. Click on **'Result'** button and enter the calculated value.

*Amplitude of input signal 'V_m' is 3V.
** dial can be controlled through both mouse and keyboard.

4. Simulation

1) Input Bias Current

a. Measurement of Inverting Bias Current

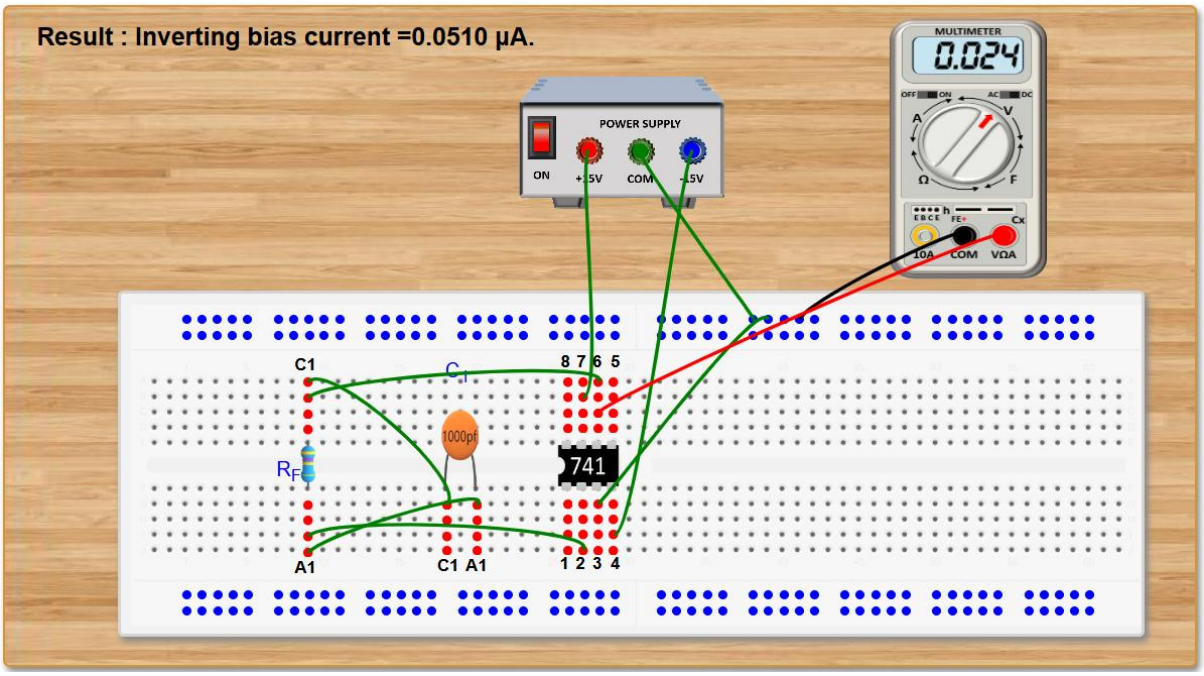

b. Measurement of Non-Inverting Bias Current

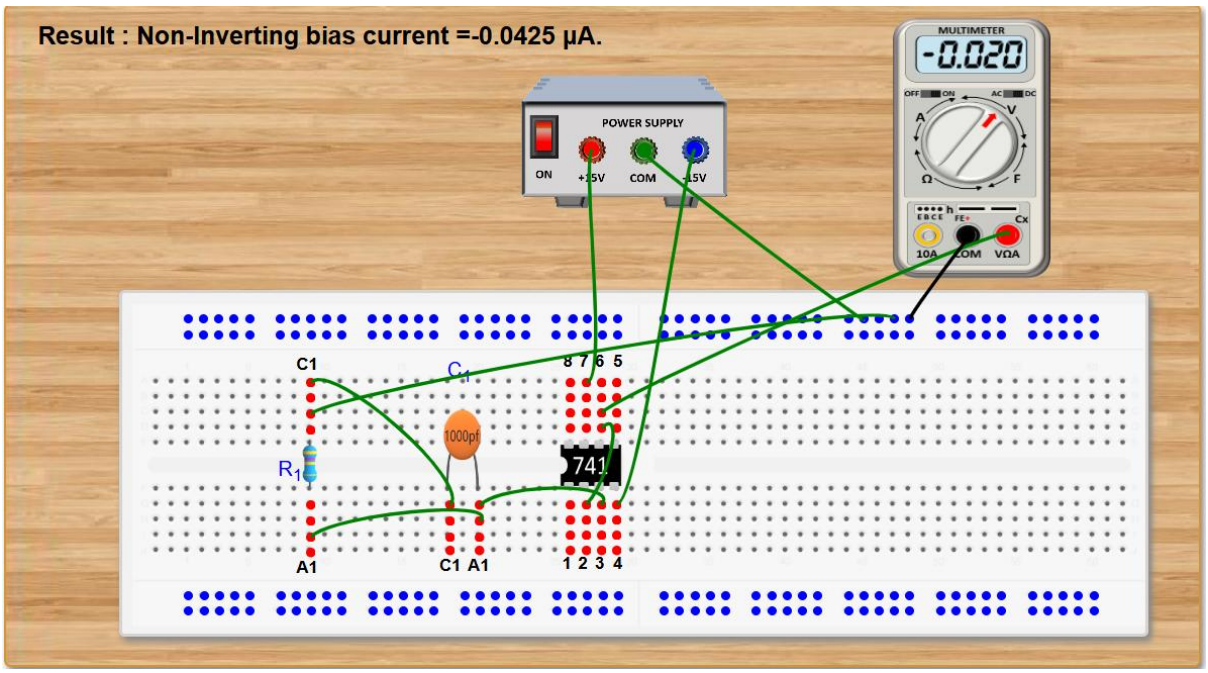

2) Input Offset Current

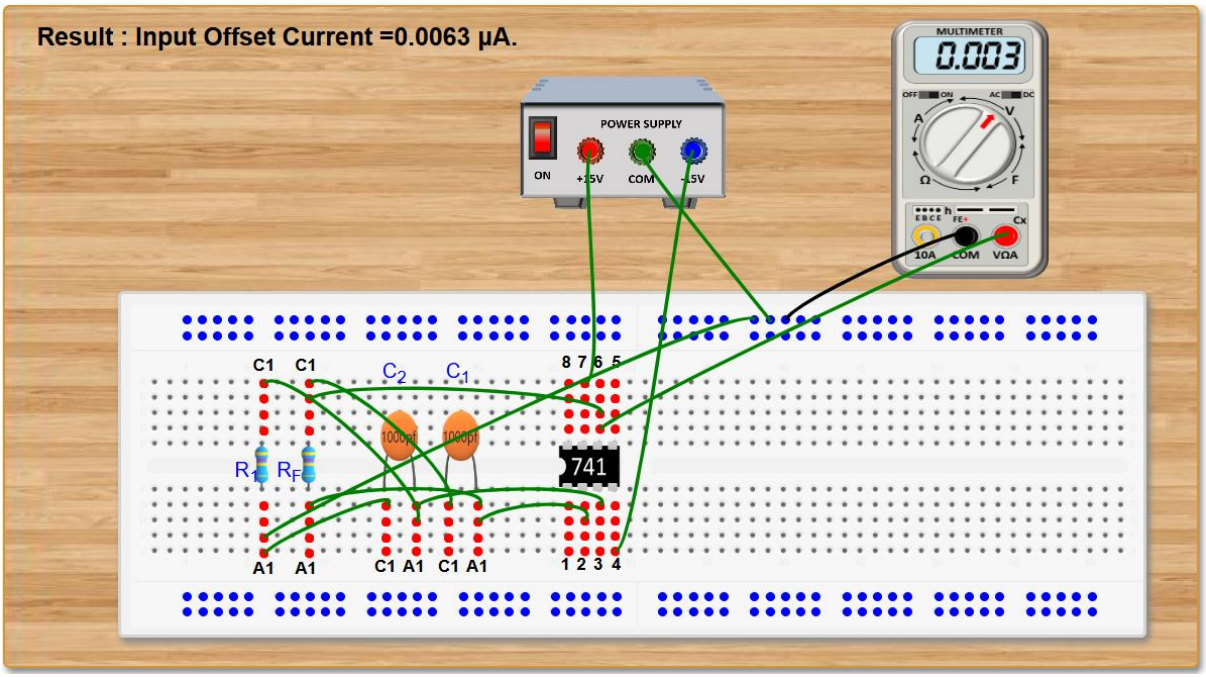

3) Input Offset Voltage

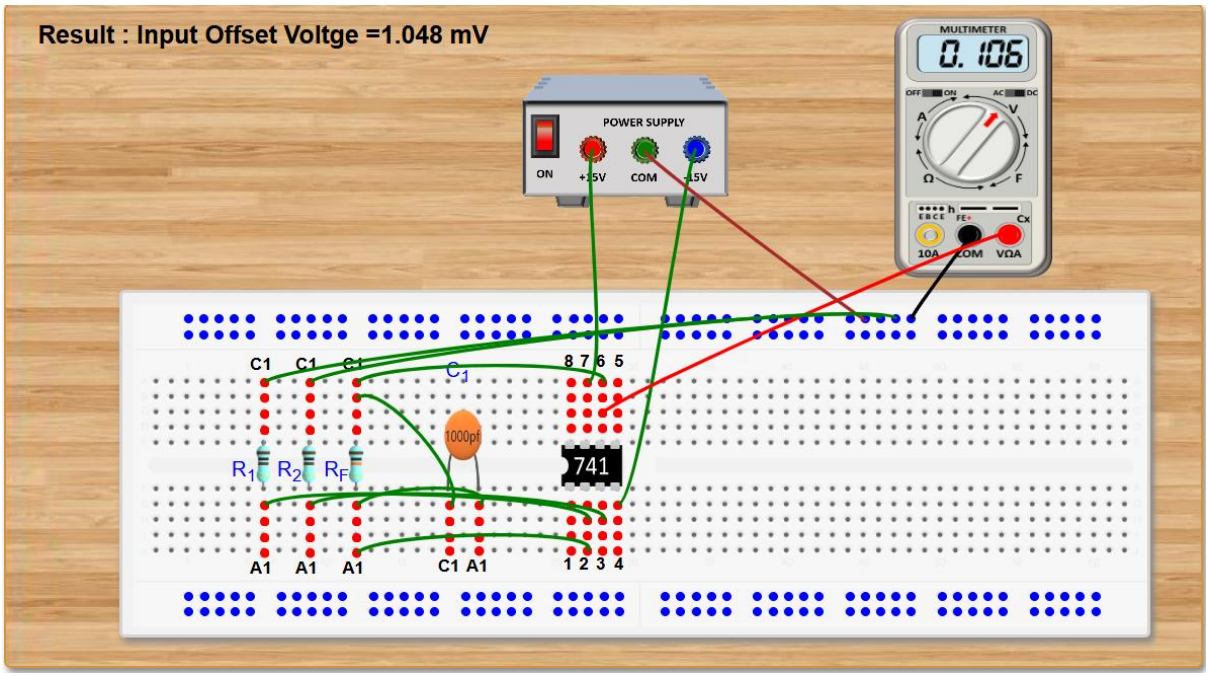

4) Slew Rate

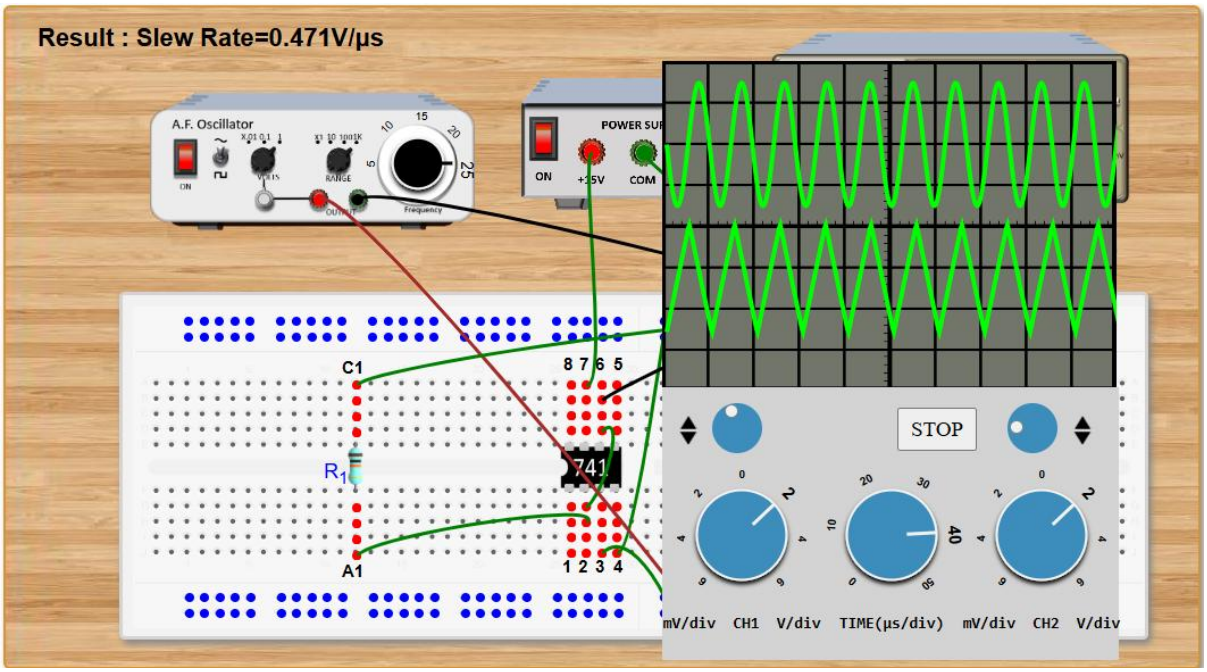

4. Inference

From the experiment, the important characteristics of the operational amplifier IC-741 were studied and measured using simulation circuits. The parameters analyzed included input bias current at the inverting and non-inverting terminals, input offset current, input offset voltage, and slew rate.

The results show that practical operational amplifiers do not behave ideally. Small input currents flow into the input terminals due to the internal transistor biasing of the differential input stage. The difference between these currents results in the input offset current, while transistor mismatches cause the presence of input offset voltage.

The slew rate measurement demonstrates the limitation of the op-amp in responding to rapid changes in input signals. When the input signal frequency increases beyond a certain limit, the output waveform becomes distorted due to the finite slew rate of the device.

Thus, the experiment verifies that practical op-amps have several non-ideal parameters that must be considered while designing analog circuits.

5. Conclusion

In this experiment, the characteristics and parameters of the operational amplifier IC-741 were studied using simulation. The input bias current at both input terminals, input offset current, input offset voltage, and slew rate were determined using the respective circuits and calculations.

The results confirm that although the ideal op-amp is assumed to have zero bias current, zero offset voltage, infinite gain, and infinite bandwidth, practical op-amps exhibit small deviations due to internal transistor mismatches and circuit limitations.

The slew rate analysis also shows that the IC-741 has a limited rate of change of output voltage, which restricts its performance at high frequencies. Therefore, these parameters must be carefully considered when using operational amplifiers in practical analog applications.

Overall, the experiment helped in understanding the non-ideal characteristics of the IC-741 operational amplifier and their impact on circuit performance.